THIS DRAWING AND SPECIFICATIONS ARE THE PROPERTY OF THE PERFORMANCE WINDOW GROUP. THEY ARE ISSUED IN STRICT CONFIDENCE AND SHALL NOT BE REPRODUCED, COPIED OR USED AS THE BASIS FOR MANUFACTURING WITHOUT WRITTEN PERMISSION.

**DEFAULT**

**OPTION**

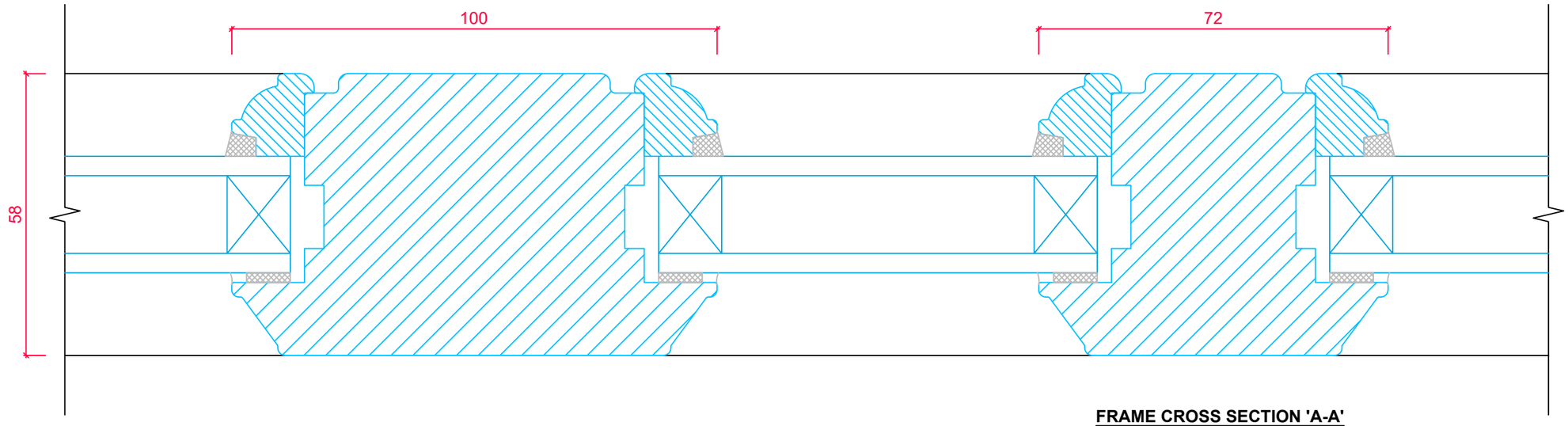


**FRAME CROSS SECTION 'A-A'**

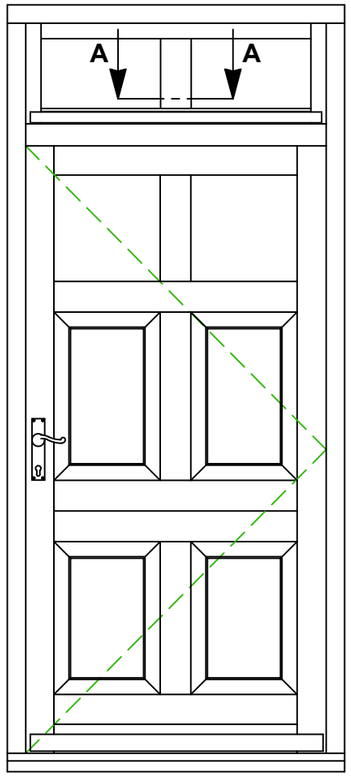


**TYPICAL FRAME LAYOUT**

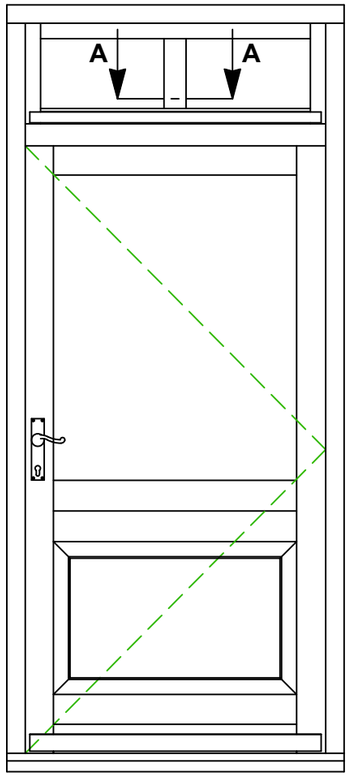


**TYPICAL FRAME LAYOUT**

TIMBER WINDOWS EST. 2004

TOLERANCES
*UNLESS OTHERWISE SPECIFIED*

ALL DIMENSIONS IN MM
ALL LINEAR DIMENSIONS ±0.4
ALL ANGLE DIMENSIONS ±0.5°
BREAK ALL SHARP EDGES 0.5

PRODUCT RANGE:
ENTRANCE DOOR - OPEN IN (Ovolo)
24mm Unit

TITLE
HORIZONTAL SECTION DETAIL
- DUMMY MULLION

Rev B

| DRAWN BY: | LH | DATE DRAWN: | 01/03/2017 | SCALE: | 1:2, 1:20 |
|---|---|---|---|---|---|

ALL MEASUREMENTS ARE FINISHED DIMENSIONS IN MM.

DO NOT SCALE DRAWING!

Din A3